Wescon Industries Inc.
601 Century Plaza Dr, Houston, TX 77073
www.wesconusa.com

DATASHEET

PART NUMBER

WES5502-M320

Wescon 5502 Drill Bushing - 1/2-13 Thread - Size 3.2mm

Maximum I.D. .3125". Made of Hardened Steel. Exclusive Hex Socket Head for easier installation and removal.

WEBSITE

https://www.wesconusa.com/products/WES5502-M320



* The image represents the general look of the series. Actual product may vary based on options selected.

Maximum I.D. .3125". Made of Hardened Steel. Exclusive Hex Socket Head for easier installation and removal.

Wescon 5502 Threaded Drill Bushings are constructed from hardened steel to ensure durability and precision in guiding drills. The unique hex socket head design facilitates easy installation and removal with a standard Allen wrench. These bushings are perfect for various machining tasks, providing accurate guidance and minimizing drill bit wear. Compatible with WES5602 Mini Drill Guides, WES5702-A Egg Cup Drill Guides, and WES5900-2 Drill Bars.

SPECIFICATIONS

Measurement Type	Metric
Thread Size	1/2-13
Size (ID)	3.20mm
Country of Origin	USA

Subject to change without notice
© Copyright Wescon Industries Inc

ADDITIONAL IMAGES AND DRAWINGS

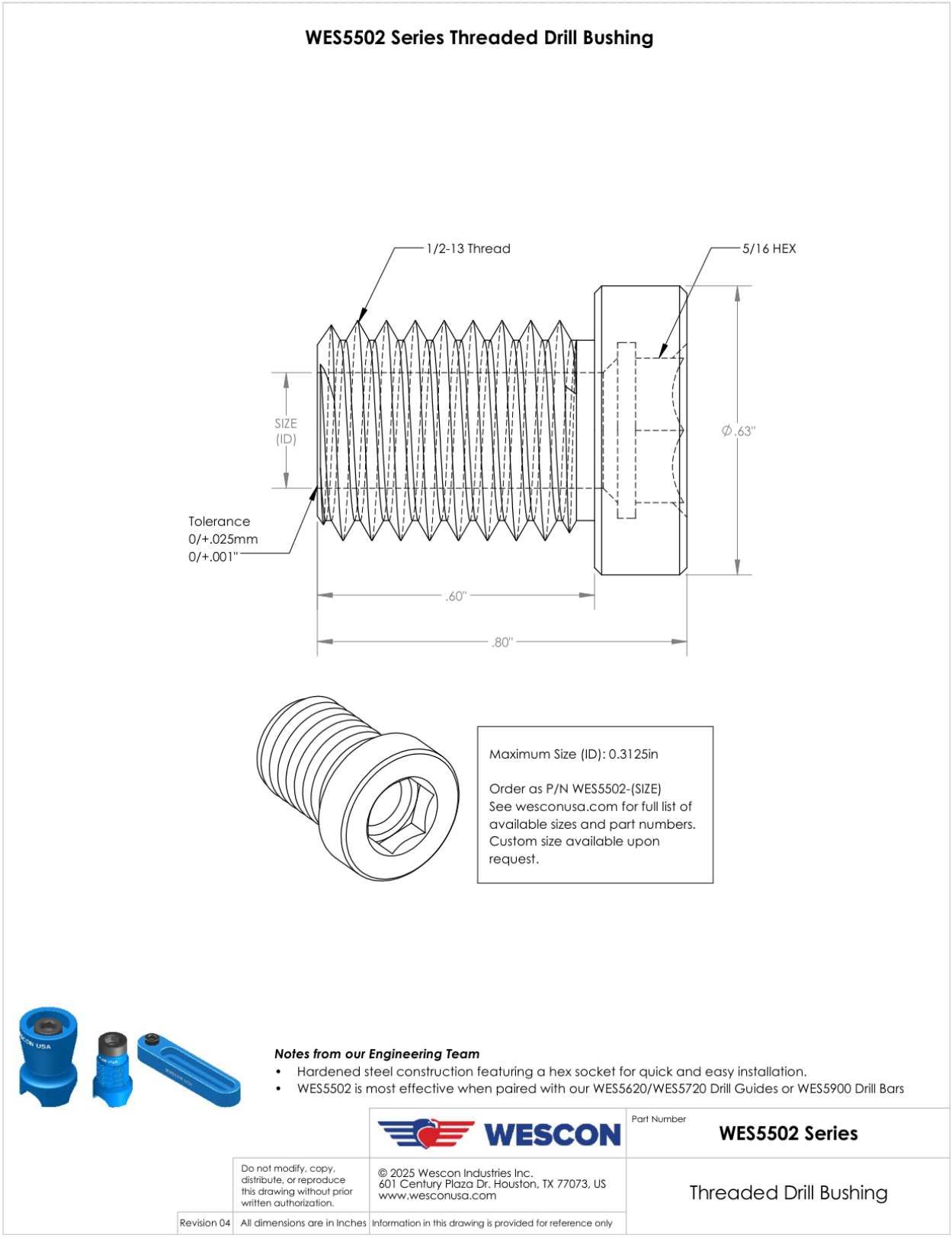

Image 1

Subject to change without notice
© Copyright Wescon Industries Inc