Wescon Industries Inc.
601 Century Plaza Dr, Houston, TX 77073
www.wesconusa.com

DATASHEET

PART NUMBER

WESSF-32-12-2340

Wescon WESSF Slip/Fixed Renewable Drill Bushing - OD 1/2" - Length 3/4" - Size 0.234in

Slip/fixed renewable drill bushings, Type SF, also known as slip fit bushings for egg cup drill guides. Hardened steel, 5/16, 1/2 and 3/4 in OD, 1/2 to 1 in long, wire gauge, fractional and decimal ID sizes.

WEBSITE

https://www.wesconusa.com/products/WESSF-32-12-2340



* The image represents the general look of the series. Actual product may vary based on options selected.

Slip/fixed renewable drill bushings, Type SF, also known as slip fit bushings for egg cup drill guides. Hardened steel, 5/16, 1/2 and 3/4 in OD, 1/2 to 1 in long, wire gauge, fractional and decimal ID sizes.

Wescon WESSF slip/fixed renewable drill bushings are Type SF bushings, the kind aircraft mechanics know as slip fit bushings for egg cup drill guides. The bushing slips into a press fit liner and is held by a lock screw or clamp, so a worn bushing or a size change takes seconds without disturbing the guide or the jig. They are made for high volume production drilling where bushings wear out before the job is done, and for drill then ream or tap sequences in the same hole.

Each bushing is hardened steel for wear resistance and holds tight tolerance on the drill. Sizes cover wire gauge, fractional and decimal drill diameters in 5/16, 1/2 and 3/4 in outside diameters, 1/2 to 1 in long. Use them with Wescon egg cup and tri-pod drill guides, slip/fixed renewable bushing guides and drill bars.

SPECIFICATIONS

Measurement Type	Imperial
Size (ID)	0.2340in
Body Diameter (OD)	1/2"
Length	3/4"
ANSI B94.33 Designation	SF-32-12-2340
Country of Origin	USA

Subject to change without notice
© Copyright Wescon Industries Inc

ADDITIONAL IMAGES AND DRAWINGS

WESSF Series SF Drill Bushing

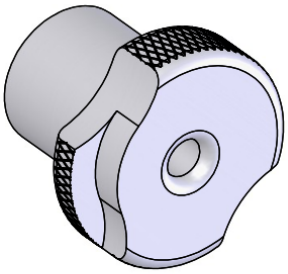

Order as P/N WESSF-OD-LENGTH-SIZE

See wesconusa.com for full list of available sizes and part numbers.

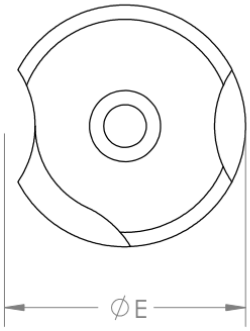

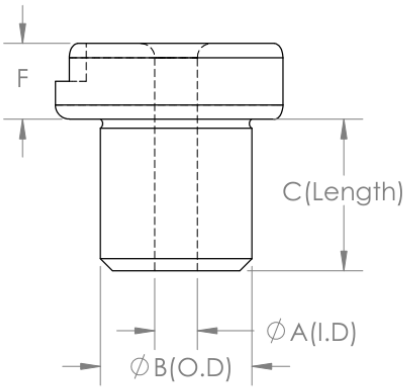

Part Number	∅A (I.D) +0.0001 to +0.0004	∅B(O.D) +0.00895	C (Length) ±1/64	∅E ±1/64	F ±1/64	ANSI
WESSF-20-12	1/16 to #10	5/16"	3/4"	35/64"	1/4"	SF-20-12
WESSF-20-16	1/16 to #10	5/16"	1"	35/64"	1/4"	SF-20-16
WESSF-32-08	5/32 to 11/32	1/2"	1/2"	51/64"	1/4"	SF-32-08
WESSF-32-12	5/32 to 11/32	1/2"	3/4"	51/64"	1/4"	SF-32-12
WESSF-32-16	5/32 to 11/32	1/2"	1"	51/64"	1/4"	SF-32-16
WESSF-48-12	5/16 to 9/16	3/4"	3/4"	1 3/64"	1/4"	SF-48-12
WESSF-48-16	5/16 to 9/16	3/4"	1"	1 3/64"	1/4"	SF-48-16



Notes from our Engineering Team

- Hardened steel construction featuring a Male Knurling for quick and easy installation. Hardness shall be 61-65Rc.
- WESSF is most effective when paired with our WES5703/WES5720 Drill Guides or WES5800 Drill Bars

WESCON

Part Number **WESSF**

Do not modify, copy, distribute, or reproduce this drawing without prior written authorization.

© 2025 Wescon Industries Inc.
601 Century Plaza Dr. Houston, TX 77073, US
www.wesconusa.com

Slip Fixed Type Renewable Bushings

Revision 00 | All dimensions are in Inches | Information in this drawing is provided for reference only

Image 1

Subject to change without notice
© Copyright Wescon Industries Inc